20.3.4 Exercises - Revision

1.

a. A cross-section through a current-carrying solenoid is shown in Fig.

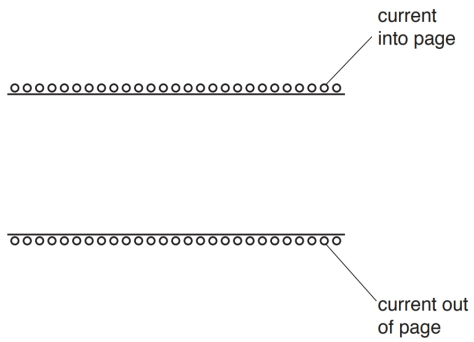

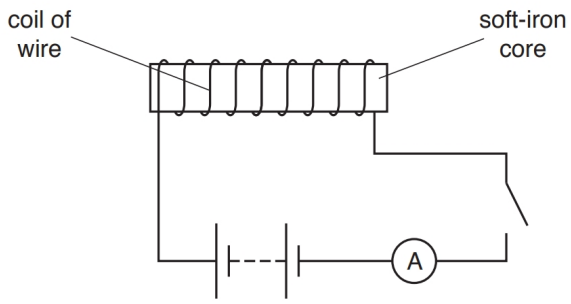

On Fig., draw field lines to represent the magnetic field inside the solenoid. [3]

b. State Faraday's law of electromagnetic induction.

.....

.....[2]

c. A coil of insulated wire is wound on to a soft-iron core. Use laws of electromagnetic induction to explain why, when the switch is closed, the current increases gradually to its maximum value. The coil is connected in series with a battery, a switch and an ammeter, as shown in Fig.

.....

.....

.....[3]

2.

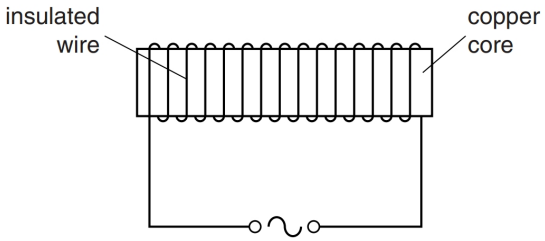

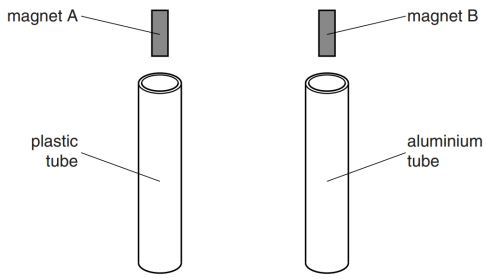

a. A coil of insulated wire is wound on a copper core, as illustrated in Fig. An alternating current is passed through the coil. The heating effect of the current in the coil is negligible. Explain why the temperature of the core rises.

.....

.....

.....

.....[4]

b. One tube is made of plastic and the other of aluminium. Two small similar bar magnets A and B are held above the tubes and then released simultaneously. The magnets do not touch the sides of the tubes. Explain why magnet B takes much longer than magnet A to fall through the tube.

.....

.....

.....

.....

.....[5]

3.

a. A solenoid of diameter 6.0cm and 540 turns is placed in a uniform magnetic field as shown in Fig. The variation with time t of the magnetic flux density is shown in Fig.

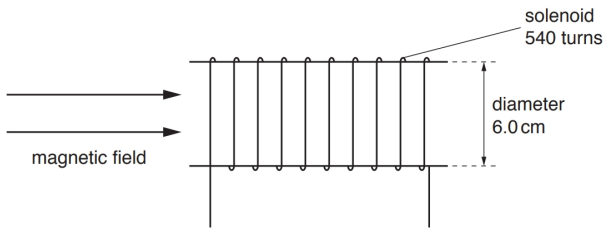

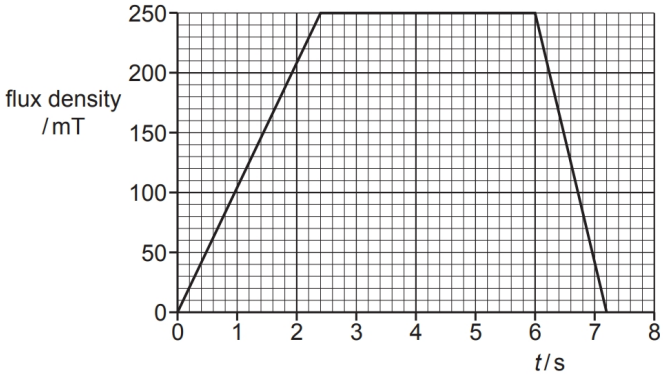

Calculate the maximum magnitude of the induced electromotive force (e.m.f.) in the solenoid.

e.m.f. = ... V [3]

b. A thin copper sheet X is supported on a rigid rod so that it hangs between the poles of a magnet as shown in Fig. Sheet X is displaced to one side and then released so that it oscillates. A motion sensor is used to record the displacement of X. A second thin copper sheet Y replaces sheet X. Sheet Y has the same overall dimensions as X but is cut into the shape shown in Fig. The motion sensor is again used to record the displacement. The graph in Fig. shows the variation with time t of the displacement s of each copper sheet.

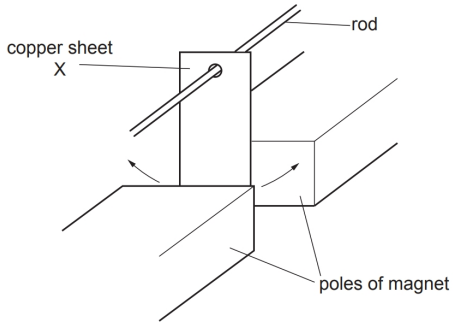

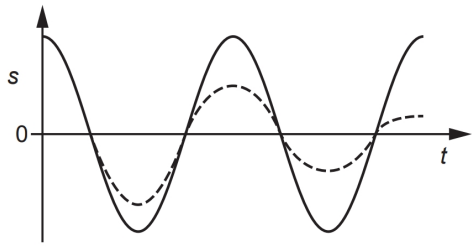

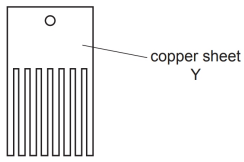

i. State the name of the phenomenon illustrated by the gradual reduction in the amplitude of the dashed line.

.....[1]

ii. Deduce which copper sheet is represented by the dashed line. Explain your answer using the principles of electromagnetic induction.

.....

.....

.....

.....[4]

4. Two coils P and Q are placed close to one another, as shown in Fig.

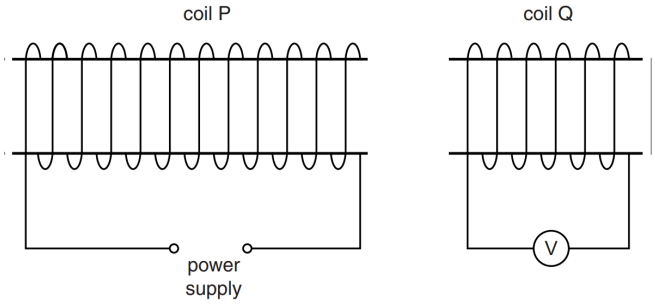

a. The current in coil P is constant. An iron rod is inserted into coil P. Explain why, during the time that the rod is moving, there is a reading on the voltmeter connected to coil Q.

.....

.....[2]

b. The current in coil P is now varied as shown in Fig. show the variation with time of the reading of the voltmeter connected to coil Q for time t = 0 to time t = t_2. [4]

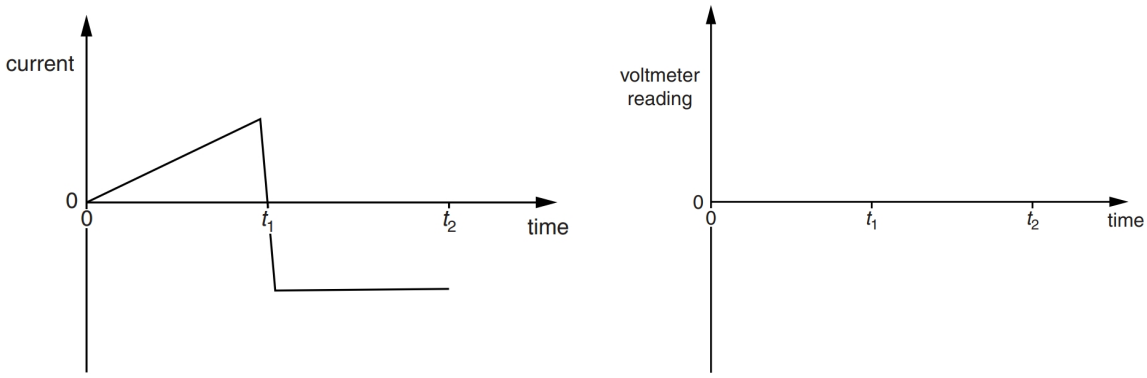

5.

a. State Lenz's law of electromagnetic induction.

.....

.....[2]

b. The diameter of the cross-section of a long solenoid is 3.2cm, as shown in Fig.

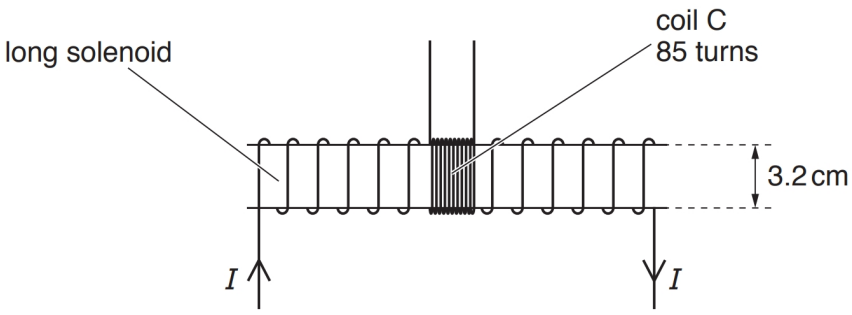

A coil C, with 85 turns of wire, is wound tightly around the centre region of the solenoid.

The magnetic flux density B, in tesla, at the centre of the solenoid is given by the expression

$$B = \pi \times 10^{-3} \times I$$

where I is the current in the solenoid in ampere.

Show that, for a current I of 2.8A in the solenoid, the magnetic flux linkage of the coil C is 6.0×10^{-4}Wb. [1]

c. The current I in the solenoid in (b) is reversed in 0.30s.

Calculate the mean e.m.f. induced in coil C.

e.m.f. = ... V [2]

d. The current I in the solenoid in (b) is now varied with time t as shown in Fig.

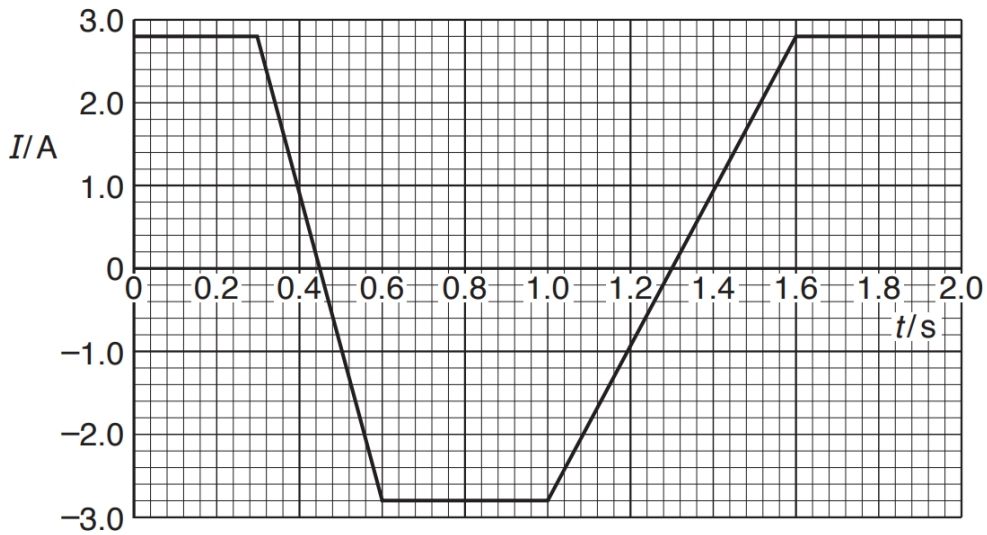
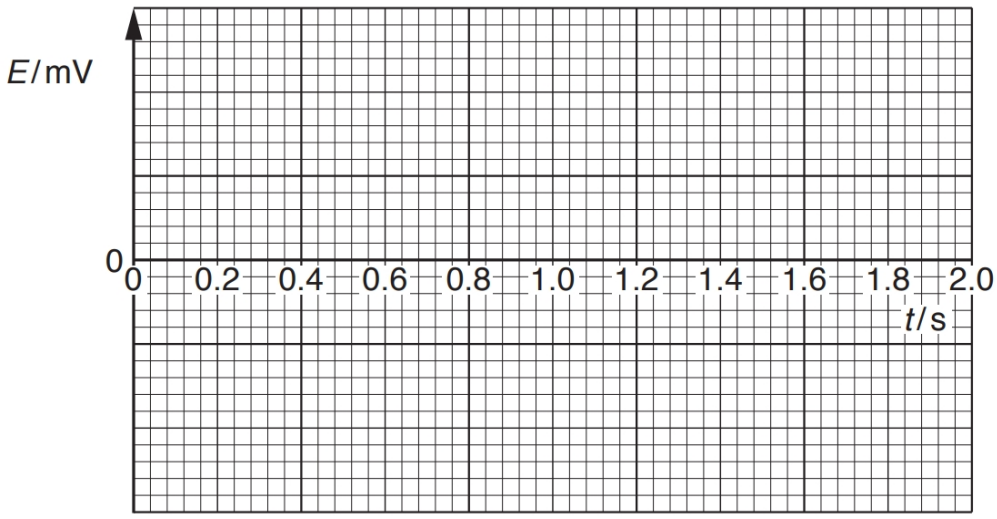
Use your answer to (c) to show, on Fig. 9.3, the variation with time t of the e.m.f. E induced in coil C. [4]